
53
53
4.8
4.4

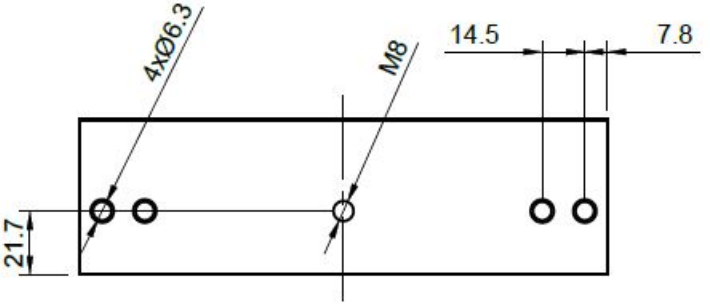
4xØ6.3
M8
14.5
7.8
21.7

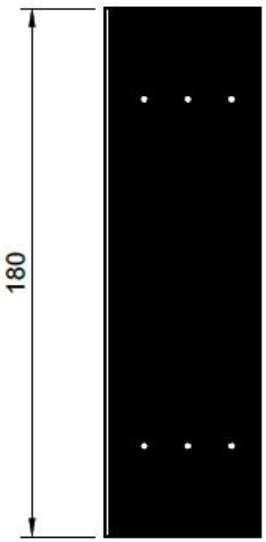
180

